Single Supply Quad Operational Amplifiers

LM324, LM324A, LM324E, LM224, LM2902, LM2902E, LM2902V, NCV2902

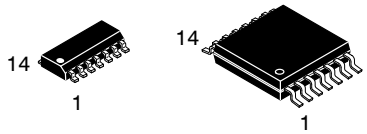

SOIC−14
D SUFFIX
CASE 751A

TSSOP−14
DTB SUFFIX
CASE 948G

The LM324 series are low−cost, quad operational amplifiers with true differential inputs. They have several distinct advantages over standard operational amplifier types in single supply applications. The quad amplifier can operate at supply voltages as low as 3.0 V or as high as 32 V with quiescent currents about one−fifth of those associated with the MC1741 (on a per amplifier basis). The common mode input range includes the negative supply, thereby eliminating the necessity for external biasing components in many applications. The output voltage range also includes the negative power supply voltage.

Features

- Short Circuited Protected Outputs
- True Differential Input Stage
- Single Supply Operation: 3.0 V to 32 V
- Low Input Bias Currents: 100 nA Maximum (LM324A)
- Four Amplifiers Per Package
- Internally Compensated
- Common Mode Range Extends to Negative Supply
- Industry Standard Pinouts
- ESD Clamps on the Inputs Increase Ruggedness without Affecting Device Operation
- NCV Prefix for Automotive and Other Applications Requiring Unique Site and Control Change Requirements; AEC−Q100 Qualified and PPAP Capable
- These Devices are Pb−Free, Halogen Free/BFR Free and are RoHS Compliant

PIN CONNECTIONS

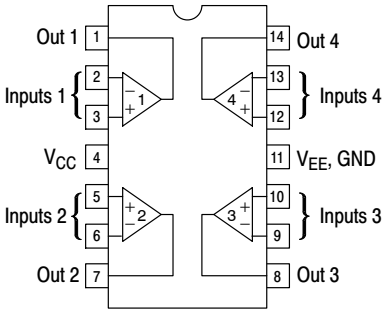

(Top View)

ORDERING INFORMATION

See detailed ordering and shipping information in the package dimensions section on page 10 of this data sheet.

DEVICE MARKING INFORMATION

See general marking information in the device marking section on page 11 of this data sheet.

© Semiconductor Components Industries, LLC, 2016

MAXIMUM RATINGS (T_A = +25°C, unless otherwise noted.)

Rating	Symbol	Value	Unit
Power Supply Voltages Single Supply Split Supplies	 V_{CC} V_{CC}, V_{EE}	 32 ±16	Vdc
Input Differential Voltage Range (Note 1)	V_{IDR}	±32	Vdc
Input Common Mode Voltage Range	V_{ICR}	−0.3 to 32	Vdc
Output Short Circuit Duration	t_{SC}	Continuous	
Junction Temperature	T_J	150	°C
Thermal Resistance, Junction−to−Air (Note 2) Case 646 Case 751A Case 948G	$R_{\theta JA}$	118 156 190	°C/W
Storage Temperature Range	T_{stg}	−65 to +150	°C
Operating Ambient Temperature Range LM224 LM324, LM324A, LM324E LM2902, LM2902E LM2902V, NCV2902 (Note 3)	T_A	 −25 to +85 0 to +70 −40 to +105 −40 to +125	°C

Stresses exceeding those listed in the Maximum Ratings table may damage the device. If any of these limits are exceeded, device functionality should not be assumed, damage may occur and reliability may be affected.

1. Split Power Supplies.
2. All $R_{\theta JA}$ measurements made on evaluation board with 1 oz. copper traces of minimum pad size. All device outputs were active.
3. *NCV2902 is qualified for automitive use.*

ESD RATINGS

Rating	HBM	MM	Unit
ESD Protection at any Pin (Human Body Model − HBM, Machine Model − MM)			
NCV2902 (Note 3)	2000	200	V
LM324E, LM2902E	2000	200	V
LM324DG/DR2G, LM2902DG/DR2G	200	100	V
All Other Devices	2000	200	V

Share Feedback
Your Opinion Matters

ELECTRICAL CHARACTERISTICS (V_{CC} = 5.0 V, V_{EE} = GND, T_A = 25°C, unless otherwise noted.)

Characteristics	Symbol	LM224			LM324A			LM324, LM324E			LM2902, LM2902E			LM2902V/NCV2902			Unit
		Min	Typ	Max	Min	Typ	Max	Min	Typ	Max	Min	Typ	Max	Min	Typ	Max	
Input Offset Voltage V_{CC} = 5.0 V to 30 V V_{ICR} = 0 V to V_{CC} −1.7 V, V_O = 1.4 V, R_S = 0 Ω	V_{IO}																mV
T_A = 25°C		–	2.0	5.0	–	2.0	3.0	–	2.0	7.0	–	2.0	7.0	–	2.0	7.0	
T_A = T_{high} (Note 4)		–	–	7.0	–	–	5.0	–	–	9.0	–	–	10	–	–	13	
T_A = T_{low} (Note 4)		–	–	7.0	–	–	5.0	–	–	9.0	–	–	10	–	–	10	
Average Temperature Coefficient of Input Offset Voltage T_A = T_{high} to T_{low} (Notes 4 and 6)	$\Delta V_{IO}/\Delta T$	–	7.0	–	–	7.0	30	–	7.0	–	–	7.0	–	–	7.0	–	μV/°C
Input Offset Current	I_{IO}	–	3.0	30	–	5.0	30	–	5.0	50	–	5.0	50	–	5.0	50	nA
T_A = T_{high} to T_{low} (Note 4)		–	–	100	–	–	75	–	–	150	–	–	200	–	–	200	
Average Temperature Coefficient of Input Offset Current T_A = T_{high} to T_{low} (Notes 4 and 6)	$\Delta I_{IO}/\Delta T$	–	10	–	–	10	300	–	10	–	–	10	–	–	10	–	pA/°C
Input Bias Current	I_{IB}	–	−90	−150	–	−45	−100	–	−90	−250	–	−90	−250	–	−90	−250	nA
T_A = T_{high} to T_{low} (Note 4)		–	–	−300	–	–	−200	–	–	−500	–	–	−500	–	–	−500	
Input Common Mode Voltage Range (Note 5) V_{CC} = 30 V	V_{ICR}																V
T_A = +25°C		0	–	28.3	0	–	28.3	0	–	28.3	0	–	28.3	0	–	28.3	
T_A = T_{high} to T_{low} (Note 4)		0	–	28	0	–	28	0	–	28	0	–	28	0	–	28	
Differential Input Voltage Range	V_{IDR}	–	–	V_{CC}	–	–	V_{CC}	–	–	V_{CC}	–	–	V_{CC}	–	–	V_{CC}	V
Large Signal Open Loop Voltage Gain R_L = 2.0 kΩ, V_{CC} = 15 V, for Large V_O Swing	A_{VOL}	50	100	–	25	100	–	25	100	–	25	100	–	25	100	–	V/mV
T_A = T_{high} to T_{low} (Note 4)		25	–	–	15	–	–	15	–	–	15	–	–	15	–	–	
Channel Separation 10 kHz ≤ f ≤ 20 kHz, Input Referenced	CS	–	−120	–	–	−120	–	–	−120	–	–	−120	–	–	−120	–	dB
Common Mode Rejection, R_S ≤ 10 kΩ	CMR	70	85	–	65	70	–	65	70	–	50	70	–	50	70	–	dB
Power Supply Rejection	PSR	65	100	–	65	100	–	65	100	–	50	100	–	50	100	–	dB

4. LM224: T_{low} = −25°C, T_{high} = +85°C
   LM324/LM324A/LM324E: T_{low} = 0°C, T_{high} = +70°C
   LM2902/LM2902E: T_{low} = −40°C, T_{high} = +105°C
   LM2902V & NCV2902: T_{low} = −40°C, T_{high} = +125°C
   NCV2902 is qualified for automotive use.
5. The input common mode voltage or either input signal voltage should not be allowed to go negative by more than 0.3 V. The upper end of the common mode voltage range is V_{CC} −1.7 V, but either or both inputs can go to +32 V without damage, independent of the magnitude of V_{CC}.
6. Guaranteed by design.

Share Feedback
Your Opinion Matters

ELECTRICAL CHARACTERISTICS (V_{CC} = 5.0 V, V_{EE} = GND, T_A = 25°C, unless otherwise noted.)

Characteristics	Symbol	LM224			LM324A			LM324, LM324E			LM2902, LM2902E			LM2902V/NCV2902			Unit
		Min	Typ	Max	Min	Typ	Max	Min	Typ	Max	Min	Typ	Max	Min	Typ	Max	
Output Voltage – High Limit	V_{OH}																V
V_{CC} = 5.0 V, R_L = 2.0 kΩ, T_A = 25°C		3.3	3.5	–	3.3	3.5	–	3.3	3.5	–	3.3	3.5	–	3.3	3.5	–	
V_{CC} = 30 V R_L = 2.0 kΩ (T_A = T_{high} to T_{low}) (Note 7)		26	–	–	26	–	–	26	–	–	26	–	–	26	–	–	
V_{CC} = 30 V R_L = 10 kΩ (T_A = T_{high} to T_{low}) (Note 7)		27	28	–	27	28	–	27	28	–	27	28	–	27	28	–	
Output Voltage – Low Limit, V_{CC} = 5.0 V, R_L = 10 kΩ, T_A = T_{high} to T_{low} (Note 7)	V_{OL}	–	5.0	20	–	5.0	20	–	5.0	20	–	5.0	100	–	5.0	100	mV
Output Source Current (V_{ID} = +1.0 V, V_{CC} = 15 V)	I_{O+}																mA
T_A = 25°C		20	40	–	20	40	–	20	40	–	20	40	–	20	40	–	
T_A = T_{high} to T_{low} (Note 7)		10	20	–	10	20	–	10	20	–	10	20	–	10	20	–	
Output Sink Current	I_{O-}																mA
(V_{ID} = −1.0 V, V_{CC} = 15 V) T_A = 25°C		10	20	–	10	20	–	10	20	–	10	20	–	10	20	–	
T_A = T_{high} to T_{low} (Note 7)		5.0	8.0	–	5.0	8.0	–	5.0	8.0	–	5.0	8.0	–	5.0	8.0	–	
(V_{ID} = −1.0 V, V_O = 200 mV, T_A = 25°C)		12	50	–	12	50	–	12	50	–	–	–	–	–	–	–	μA
Output Short Circuit to Ground (Note 8)	I_{SC}	–	40	60	–	40	60	–	40	60	–	40	60	–	40	60	mA
Power Supply Current (T_A = T_{high} to T_{low}) (Note 7)	I_{CC}																mA
V_{CC} = 30 V V_O = 0 V, R_L = ∞		–	–	3.0	–	1.4	3.0	–	–	3.0	–	–	3.0	–	–	3.0	
V_{CC} = 5.0 V, V_O = 0 V, R_L = ∞		–	–	1.2	–	0.7	1.2	–	–	1.2	–	–	1.2	–	–	1.2	

7. LM224: T_{low} = −25°C, T_{high} = +85°C
   LM324/LM324A/LM324E: T_{low} = 0°C, T_{high} = +70°C
   LM2902/LM2902E: T_{low} = −40°C, T_{high} = +105°C
   LM2902V & NCV2902: T_{low} = −40°C, T_{high} = +125°C
   NCV2902 is qualified for automotive use.
8. The input common mode voltage or either input signal voltage should not be allowed to go negative by more than 0.3 V. The upper end of the common mode voltage range is V_{CC} −1.7 V, but either or both inputs can go to +32 V without damage, independent of the magnitude of V_{CC}.

Product parametric performance is indicated in the Electrical Characteristics for the listed test conditions, unless otherwise noted. Product performance may not be indicated by the Electrical Characteristics if operated under different conditions.

Share Feedback
Your Opinion Matters

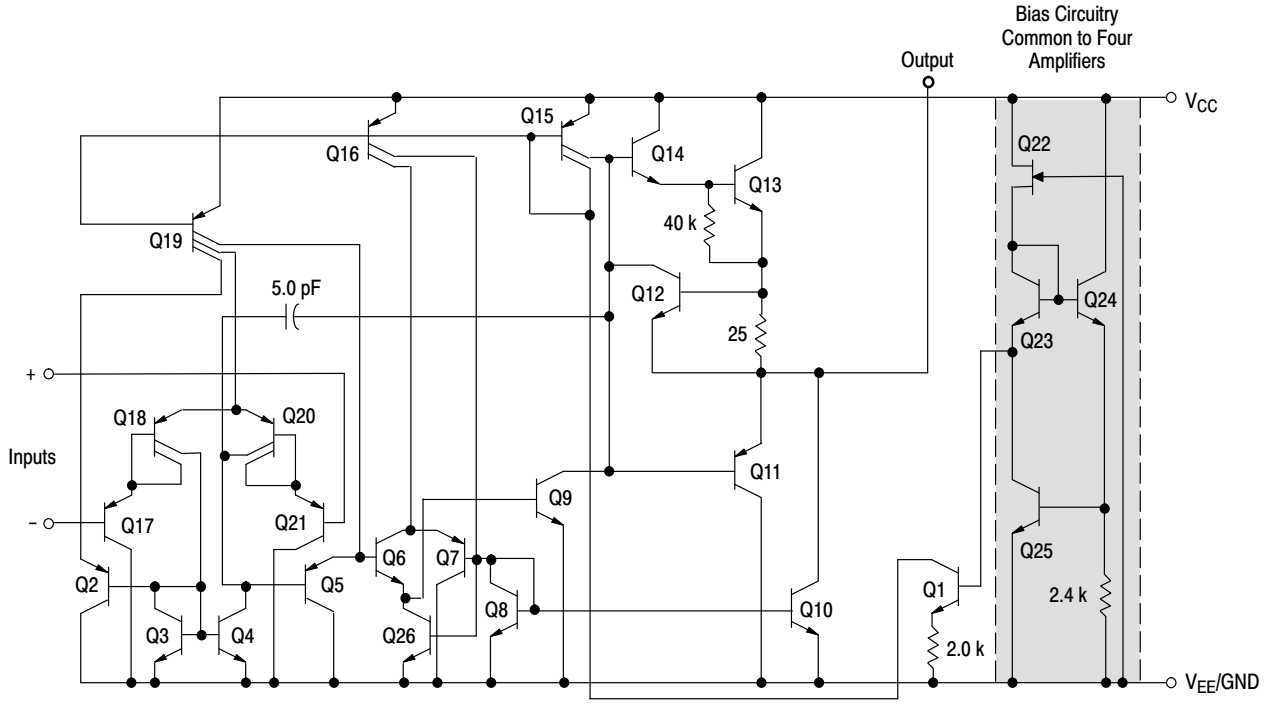

Figure 1. Representative Circuit Diagram
(One−Fourth of Circuit Shown)

Share Feedback
Your Opinion Matters

CIRCUIT DESCRIPTION

The LM324 series is made using four internally compensated, two−stage operational amplifiers. The first stage of each consists of differential input devices Q20 and Q18 with input buffer transistors Q21 and Q17 and the differential to single ended converter Q3 and Q4. The first stage performs not only the first stage gain function but also performs the level shifting and transconductance reduction functions. By reducing the transconductance, a smaller compensation capacitor (only 5.0 pF) can be employed, thus saving chip area. The transconductance reduction is accomplished by splitting the collectors of Q20 and Q18. Another feature of this input stage is that the input common mode range can include the negative supply or ground, in single supply operation, without saturating either the input devices or the differential to single−ended converter. The second stage consists of a standard current source load amplifier stage.

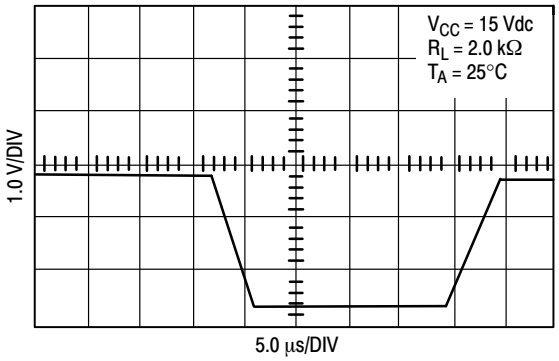

Figure 2. Large Signal Voltage Follower Response

Each amplifier is biased from an internal−voltage regulator which has a low temperature coefficient thus giving each amplifier good temperature characteristics as well as excellent power supply rejection.

Figure 3.

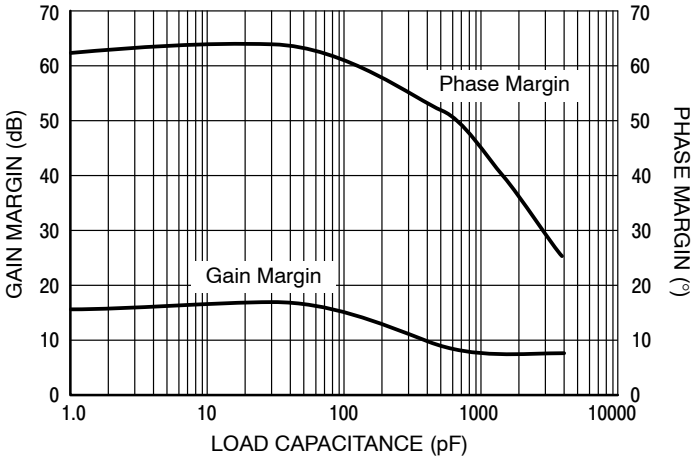

Figure 4. Gain and Phase Margin

Share Feedback
Your Opinion Matters

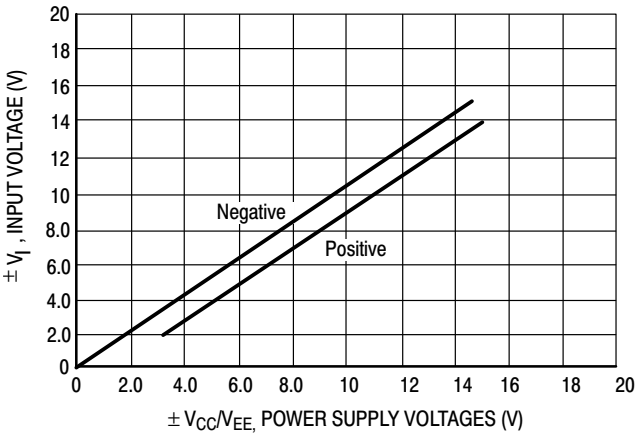

Figure 5. Input Voltage Range

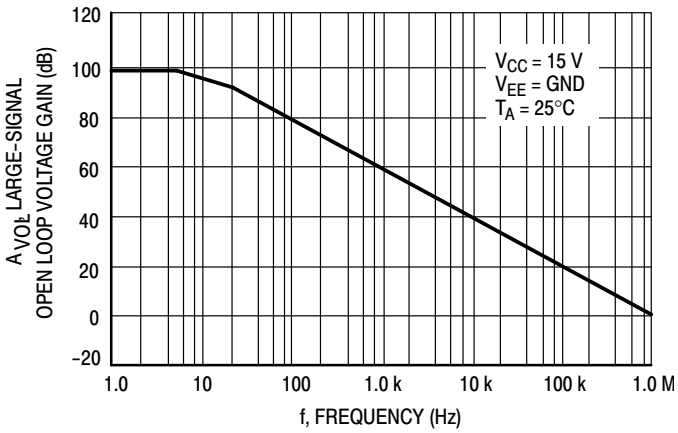

Figure 6. Open Loop Frequency

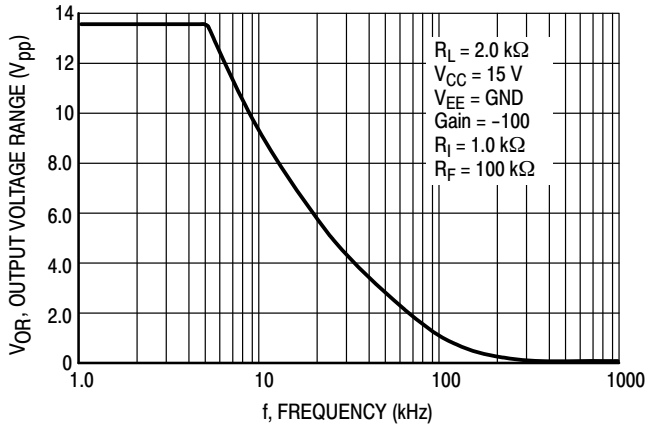

Figure 7. Large−Signal Frequency Response

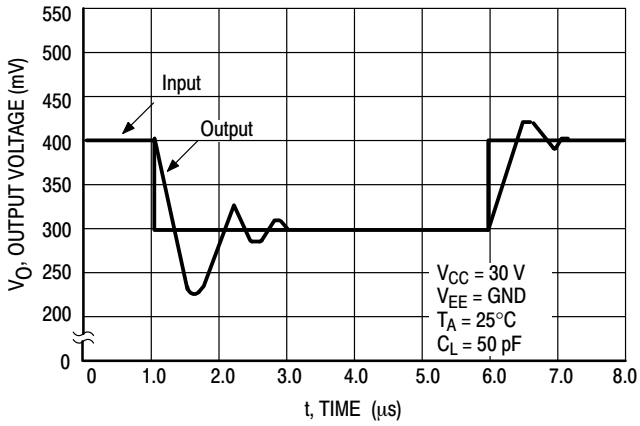

Figure 8. Small−Signal Voltage Follower Pulse Response (Noninverting)

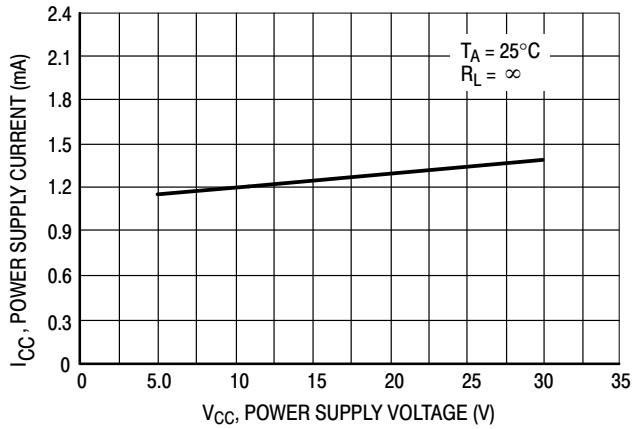

Figure 9. Power Supply Current versus Power Supply Voltage

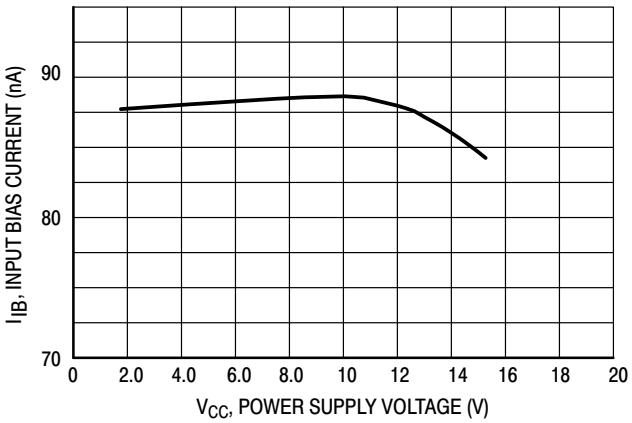

Figure 10. Input Bias Current versus Power Supply Voltage

Share Feedback
Your Opinion Matters

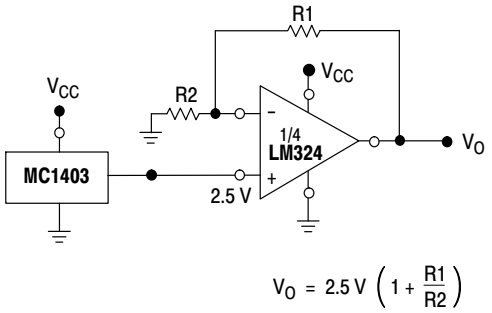

Figure 11. Voltage Reference

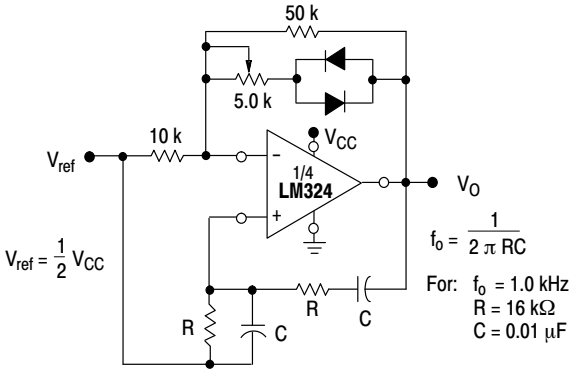

Figure 12. Wien Bridge Oscillator

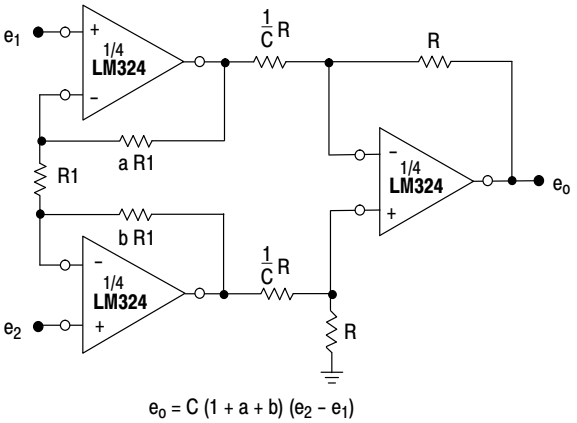

Figure 13. High Impedance Differential Amplifier

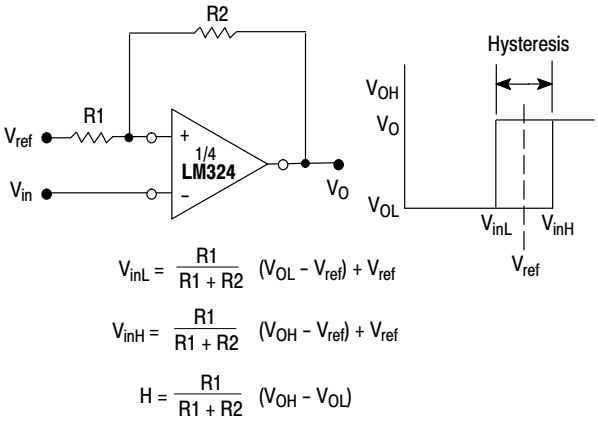

Figure 14. Comparator with Hysteresis

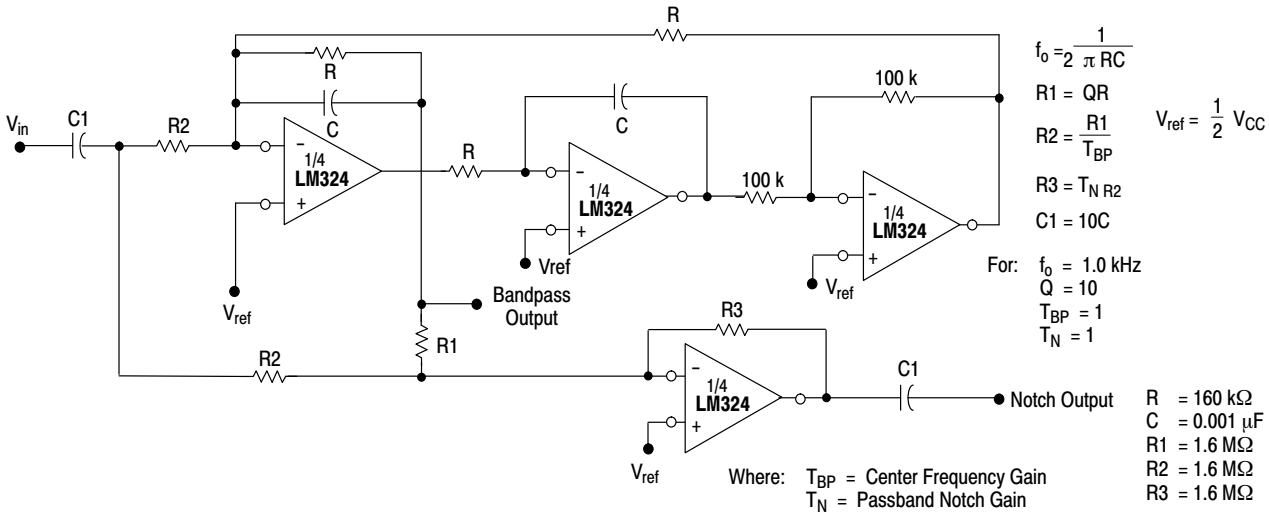

Figure 15. Bi−Quad Filter

Share Feedback
Your Opinion Matters

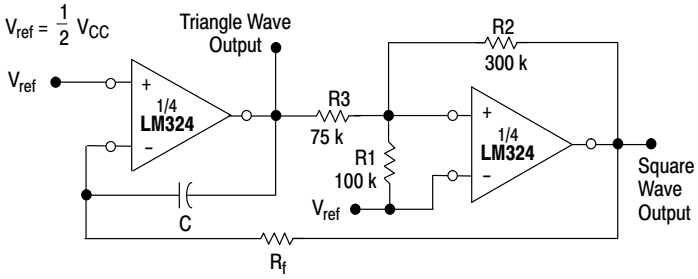

$$f = \frac{R1 + R_C}{4\,CR_f\,R1} \quad \text{if} \quad R3 = \frac{R2\,R1}{R2 + R1}$$

Figure 16. Function Generator

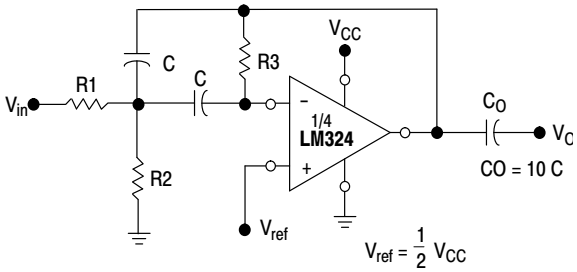

Figure 17. Multiple Feedback Bandpass Filter

Given: f_o = center frequency

$A(f_o)$ = gain at center frequency

Choose value f_o, C

Then: $R3 = \frac{Q}{\pi f_o C}$

$R1 = \frac{R3}{2\,A(f_o)}$

$R2 = \frac{R1\,R3}{4Q^2\,R1 - R3}$

For less than 10% error from operational amplifier, $\frac{Q_o f_o}{BW} < 0.1$

where f_o and BW are expressed in Hz.

If source impedance varies, filter may be preceded with voltage follower buffer to stabilize filter parameters.

Share Feedback
Your Opinion Matters

ORDERING INFORMATION

Device	Operating Temperature Range	Package	Shipping†
LM224DR2G	−25°C to +85°C	SOIC−14 (Pb−Free)	2500/Tape & Reel
LM224DTBR2G		TSSOP−14 (Pb−Free)	2500/Tape & Reel
LM324DR2G	0°C to +70°C	SOIC−14 (Pb−Free)	2500/Tape & Reel
LM324EDR2G		SOIC−14 (Pb−Free)	2500/Tape & Reel
LM324DTBR2G		TSSOP−14 (Pb−Free)	2500/Tape & Reel
LM324ADR2G		SOIC−14 (Pb−Free)	2500/Tape & Reel
LM324ADTBR2G		TSSOP−14 (Pb−Free)	2500/Tape & Reel
LM2902DR2G	−40°C to +105°C	SOIC−14 (Pb−Free)	2500/Tape & Reel
LM2902EDR2G		SOIC−14 (Pb−Free)	2500/Tape & Reel
LM2902DTBR2G		TSSOP−14 (Pb−Free)	2500/Tape & Reel
LM2902VDR2G	−40°C to +125°C	SOIC−14 (Pb−Free)	2500/Tape & Reel
LM2902VDTBR2G		TSSOP−14 (Pb−Free)	2500/Tape & Reel
NCV2902DR2G*		SOIC−14 (Pb−Free)	2500/Tape & Reel
NCV2902DTBR2G*		TSSOP−14 (Pb−Free)	

†For information on tape and reel specifications, including part orientation and tape sizes, please refer to our Tape and Reel Packaging Specifications Brochure, BRD8011/D.

*NCV Prefix for Automotive and Other Applications Requiring Unique Site and Control Change Requirements; AEC−Q100 Qualified and PPAP Capable.

Share Feedback
Your Opinion Matters

MARKING DIAGRAMS

SOIC−14
D SUFFIX
CASE 751A

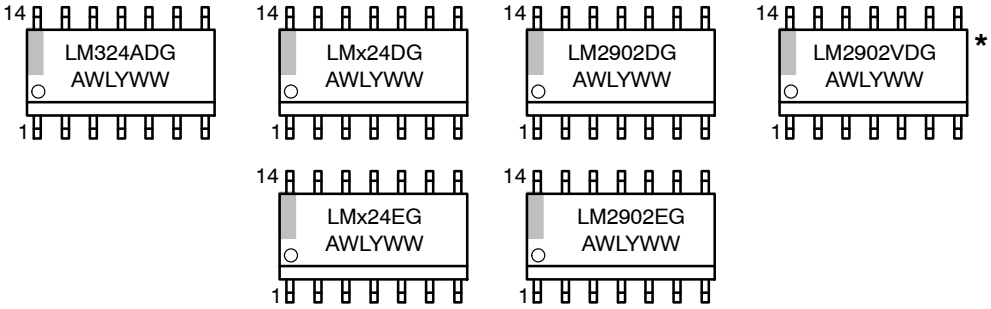

TSSOP−14
DTB SUFFIX
CASE 948G

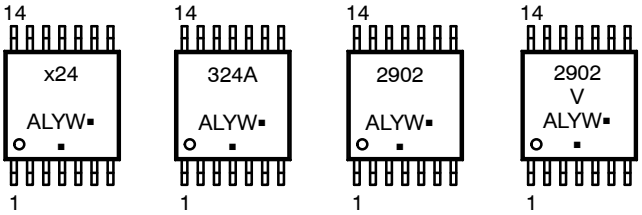

x	= 2 or 3
A	= Assembly Location
WL, L	= Wafer Lot
YY, Y	= Year
WW, W	= Work Week
G or ▪	= Pb−Free Package

(Note: Microdot may be in either location)
*This marking diagram also applies to NCV2902.

Share Feedback
Your Opinion Matters

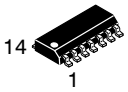

SCALE 1:1

SOIC−14 NB
CASE 751A−03
ISSUE L

DATE 03 FEB 2016

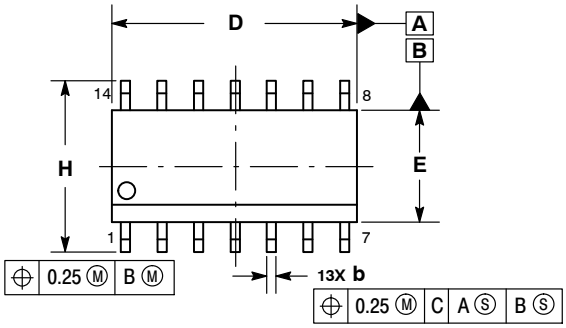

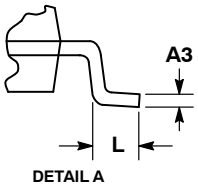

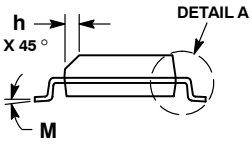

NOTES:
1. DIMENSIONING AND TOLERANCING PER ASME Y14.5M, 1994.
2. CONTROLLING DIMENSION: MILLIMETERS.
3. DIMENSION b DOES NOT INCLUDE DAMBAR PROTRUSION. ALLOWABLE PROTRUSION SHALL BE 0.13 TOTAL IN EXCESS OF AT MAXIMUM MATERIAL CONDITION.
4. DIMENSIONS D AND E DO NOT INCLUDE MOLD PROTRUSIONS.
5. MAXIMUM MOLD PROTRUSION 0.15 PER SIDE.

	MILLIMETERS		INCHES	
DIM	MIN	MAX	MIN	MAX
A	1.35	1.75	0.054	0.068
A1	0.10	0.25	0.004	0.010
A3	0.19	0.25	0.008	0.010
b	0.35	0.49	0.014	0.019
D	8.55	8.75	0.337	0.344
E	3.80	4.00	0.150	0.157
e	1.27 BSC		0.050 BSC	
H	5.80	6.20	0.228	0.244
h	0.25	0.50	0.010	0.019
L	0.40	1.25	0.016	0.049
M	0 °	7 °	0 °	7 °

SOLDERING FOOTPRINT*

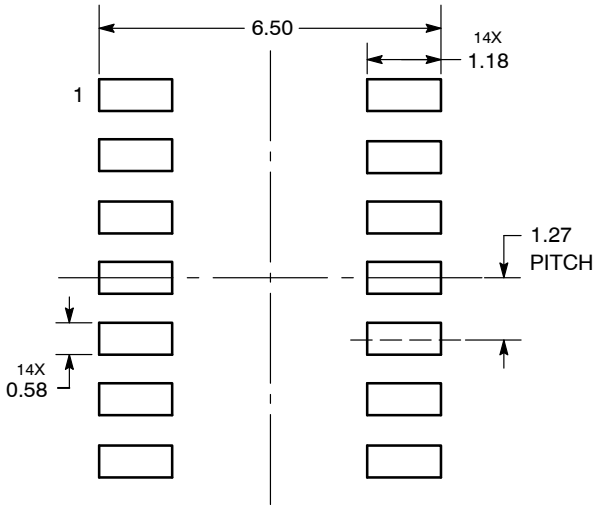

DIMENSIONS: MILLIMETERS

*For additional information on our Pb−Free strategy and soldering details, please download the **onsemi** Soldering and Mounting Techniques Reference Manual, SOLDERRM/D.

GENERIC MARKING DIAGRAM*

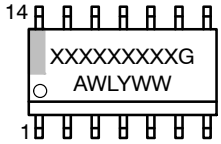

XXXXX	= Specific Device Code
A	= Assembly Location
WL	= Wafer Lot
Y	= Year
WW	= Work Week
G	= Pb−Free Package

*This information is generic. Please refer to device data sheet for actual part marking. Pb−Free indicator, “G” or microdot “▪”, may or may not be present. Some products may not follow the Generic Marking.

STYLES ON PAGE 2

DOCUMENT NUMBER:	98ASB42565B	Electronic versions are uncontrolled except when accessed directly from the Document Repository. Printed versions are uncontrolled except when stamped “CONTROLLED COPY” in red.
DESCRIPTION:	SOIC−14 NB	PAGE 1 OF 2

onsemi and onsemi are trademarks of Semiconductor Components Industries, LLC dba **onsemi** or its subsidiaries in the United States and/or other countries. **onsemi** reserves the right to make changes without further notice to any products herein. **onsemi** makes no warranty, representation or guarantee regarding the suitability of its products for any particular purpose, nor does **onsemi** assume any liability arising out of the application or use of any product or circuit, and specifically disclaims any and all liability, including without limitation special, consequential or incidental damages. **onsemi** does not convey any license under its patent rights nor the rights of others.

SOIC−14
CASE 751A−03
ISSUE L

DATE 03 FEB 2016

STYLE 1:
PIN 1. COMMON CATHODE
2. ANODE/CATHODE
3. ANODE/CATHODE
4. NO CONNECTION
5. ANODE/CATHODE
6. NO CONNECTION
7. ANODE/CATHODE
8. ANODE/CATHODE
9. ANODE/CATHODE
10. NO CONNECTION
11. ANODE/CATHODE
12. ANODE/CATHODE
13. NO CONNECTION
14. COMMON ANODE

STYLE 2:
CANCELLED

STYLE 3:
PIN 1. NO CONNECTION
2. ANODE
3. ANODE
4. NO CONNECTION
5. ANODE
6. NO CONNECTION
7. ANODE
8. ANODE
9. ANODE
10. NO CONNECTION
11. ANODE
12. ANODE
13. NO CONNECTION
14. COMMON CATHODE

STYLE 4:
PIN 1. NO CONNECTION
2. CATHODE
3. CATHODE
4. NO CONNECTION
5. CATHODE
6. NO CONNECTION
7. CATHODE
8. CATHODE
9. CATHODE
10. NO CONNECTION
11. CATHODE
12. CATHODE
13. NO CONNECTION
14. COMMON ANODE

STYLE 5:
PIN 1. COMMON CATHODE
2. ANODE/CATHODE
3. ANODE/CATHODE
4. ANODE/CATHODE
5. ANODE/CATHODE
6. NO CONNECTION
7. COMMON ANODE
8. COMMON CATHODE
9. ANODE/CATHODE
10. ANODE/CATHODE
11. ANODE/CATHODE
12. ANODE/CATHODE
13. NO CONNECTION
14. COMMON ANODE

STYLE 6:
PIN 1. CATHODE
2. CATHODE
3. CATHODE
4. CATHODE
5. CATHODE
6. CATHODE
7. CATHODE
8. ANODE
9. ANODE
10. ANODE
11. ANODE
12. ANODE
13. ANODE
14. ANODE

STYLE 7:
PIN 1. ANODE/CATHODE
2. COMMON ANODE
3. COMMON CATHODE
4. ANODE/CATHODE
5. ANODE/CATHODE
6. ANODE/CATHODE
7. ANODE/CATHODE
8. ANODE/CATHODE
9. ANODE/CATHODE
10. ANODE/CATHODE
11. COMMON CATHODE
12. COMMON ANODE
13. ANODE/CATHODE
14. ANODE/CATHODE

STYLE 8:
PIN 1. COMMON CATHODE
2. ANODE/CATHODE
3. ANODE/CATHODE
4. NO CONNECTION
5. ANODE/CATHODE
6. ANODE/CATHODE
7. COMMON ANODE
8. COMMON ANODE
9. ANODE/CATHODE
10. ANODE/CATHODE
11. NO CONNECTION
12. ANODE/CATHODE
13. ANODE/CATHODE
14. COMMON CATHODE

onsemi and onsemi are trademarks of Semiconductor Components Industries, LLC dba **onsemi** or its subsidiaries in the United States and/or other countries. **onsemi** reserves the right to make changes without further notice to any products herein. **onsemi** makes no warranty, representation or guarantee regarding the suitability of its products for any particular purpose, nor does **onsemi** assume any liability arising out of the application or use of any product or circuit, and specifically disclaims any and all liability, including without limitation special, consequential or incidental damages. **onsemi** does not convey any license under its patent rights nor the rights of others.

© Semiconductor Components Industries, LLC, 2019

TSSOP−14 WB
CASE 948G
ISSUE C

DATE 17 FEB 2016

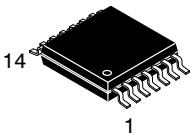

SCALE 2:1

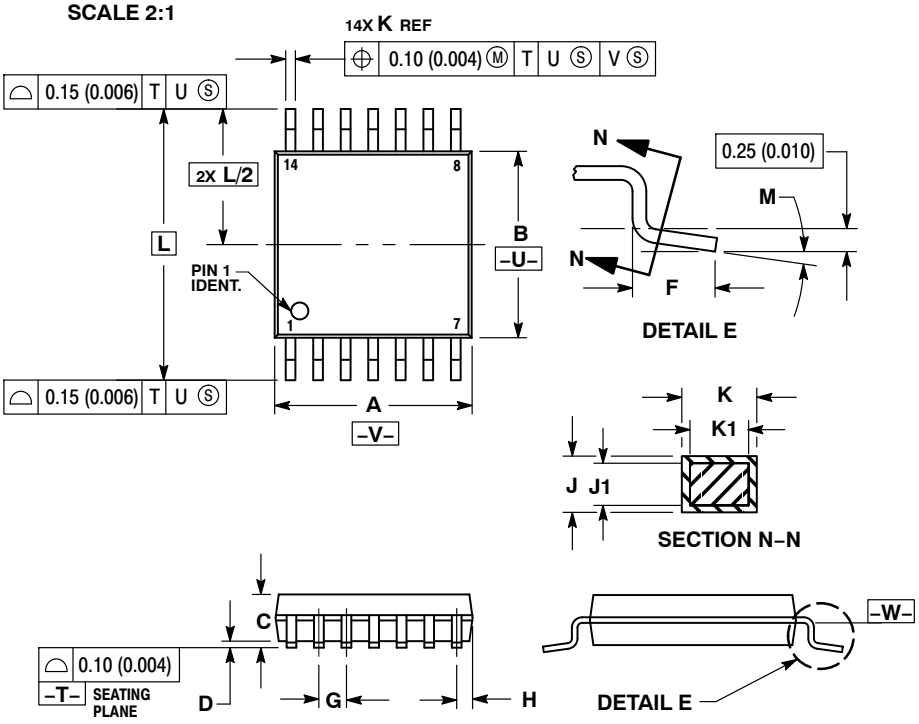

NOTES:
1. DIMENSIONING AND TOLERANCING PER ANSI Y14.5M, 1982.
2. CONTROLLING DIMENSION: MILLIMETER.
3. DIMENSION A DOES NOT INCLUDE MOLD FLASH, PROTRUSIONS OR GATE BURRS. MOLD FLASH OR GATE BURRS SHALL NOT EXCEED 0.15 (0.006) PER SIDE.
4. DIMENSION B DOES NOT INCLUDE INTERLEAD FLASH OR PROTRUSION. INTERLEAD FLASH OR PROTRUSION SHALL NOT EXCEED 0.25 (0.010) PER SIDE.
5. DIMENSION K DOES NOT INCLUDE DAMBAR PROTRUSION. ALLOWABLE DAMBAR PROTRUSION SHALL BE 0.08 (0.003) TOTAL IN EXCESS OF THE K DIMENSION AT MAXIMUM MATERIAL CONDITION.
6. TERMINAL NUMBERS ARE SHOWN FOR REFERENCE ONLY.
7. DIMENSION A AND B ARE TO BE DETERMINED AT DATUM PLANE –W–.

	MILLIMETERS		INCHES	
DIM	MIN	MAX	MIN	MAX
A	4.90	5.10	0.193	0.200
B	4.30	4.50	0.169	0.177
C	–––	1.20	–––	0.047
D	0.05	0.15	0.002	0.006
F	0.50	0.75	0.020	0.030
G	0.65 BSC		0.026 BSC	
H	0.50	0.60	0.020	0.024
J	0.09	0.20	0.004	0.008
J1	0.09	0.16	0.004	0.006
K	0.19	0.30	0.007	0.012
K1	0.19	0.25	0.007	0.010
L	6.40 BSC		0.252 BSC	
M	0 °	8 °	0 °	8 °

RECOMMENDED SOLDERING FOOTPRINT*

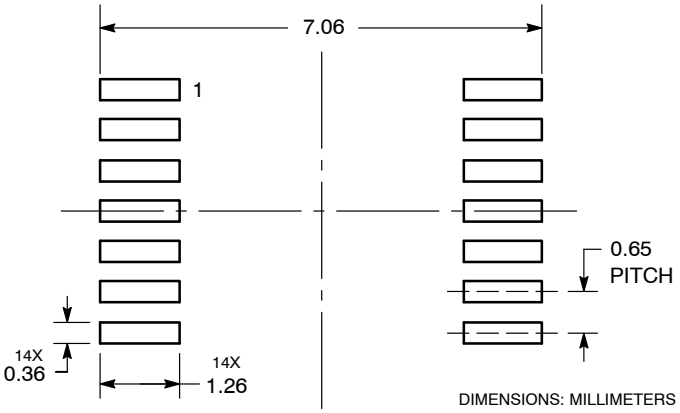

*For additional information on our Pb−Free strategy and soldering details, please download the **onsemi** Soldering and Mounting Techniques Reference Manual, SOLDERRM/D.

GENERIC MARKING DIAGRAM*

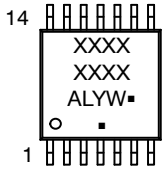

A = Assembly Location
L = Wafer Lot
Y = Year
W = Work Week
▪ = Pb−Free Package

(Note: Microdot may be in either location)

*This information is generic. Please refer to device data sheet for actual part marking. Pb−Free indicator, “G” or microdot “▪”, may or may not be present. Some products may not follow the Generic Marking.

DOCUMENT NUMBER:	98ASH70246A	Electronic versions are uncontrolled except when accessed directly from the Document Repository. Printed versions are uncontrolled except when stamped “CONTROLLED COPY” in red.
DESCRIPTION:	TSSOP−14 WB	PAGE 1 OF 1

onsemi and onsemi are trademarks of Semiconductor Components Industries, LLC dba **onsemi** or its subsidiaries in the United States and/or other countries. **onsemi** reserves the right to make changes without further notice to any products herein. **onsemi** makes no warranty, representation or guarantee regarding the suitability of its products for any particular purpose, nor does **onsemi** assume any liability arising out of the application or use of any product or circuit, and specifically disclaims any and all liability, including without limitation special, consequential or incidental damages. **onsemi** does not convey any license under its patent rights nor the rights of others.

onsemi, onsemi, and other names, marks, and brands are registered and/or common law trademarks of Semiconductor Components Industries, LLC dba "**onsemi**" or its affiliates and/or subsidiaries in the United States and/or other countries. **onsemi** owns the rights to a number of patents, trademarks, copyrights, trade secrets, and other intellectual property. A listing of **onsemi**'s product/patent coverage may be accessed at www.onsemi.com/site/pdf/Patent−Marking.pdf. **onsemi** reserves the right to make changes at any time to any products or information herein, without notice. The information herein is provided "as−is" and **onsemi** makes no warranty, representation or guarantee regarding the accuracy of the information, product features, availability, functionality, or suitability of its products for any particular purpose, nor does **onsemi** assume any liability arising out of the application or use of any product or circuit, and specifically disclaims any and all liability, including without limitation special, consequential or incidental damages. Buyer is responsible for its products and applications using **onsemi** products, including compliance with all laws, regulations and safety requirements or standards, regardless of any support or applications information provided by **onsemi**. "Typical" parameters which may be provided in **onsemi** data sheets and/or specifications can and do vary in different applications and actual performance may vary over time. All operating parameters, including "Typicals" must be validated for each customer application by customer's technical experts. **onsemi** does not convey any license under any of its intellectual property rights nor the rights of others. **onsemi** products are not designed, intended, or authorized for use as a critical component in life support systems or any FDA Class 3 medical devices or medical devices with a same or similar classification in a foreign jurisdiction or any devices intended for implantation in the human body. Should Buyer purchase or use **onsemi** products for any such unintended or unauthorized application, Buyer shall indemnify and hold **onsemi** and its officers, employees, subsidiaries, affiliates, and distributors harmless against all claims, costs, damages, and expenses, and reasonable attorney fees arising out of, directly or indirectly, any claim of personal injury or death associated with such unintended or unauthorized use, even if such claim alleges that **onsemi** was negligent regarding the design or manufacture of the part. **onsemi** is an Equal Opportunity/Affirmative Action Employer. This literature is subject to all applicable copyright laws and is not for resale in any manner.

ADDITIONAL INFORMATION

TECHNICAL PUBLICATIONS:
Technical Library: www.onsemi.com/design/resources/technical−documentation
onsemi Website: www.onsemi.com

ONLINE SUPPORT: www.onsemi.com/support
For additional information, please contact your local Sales Representative at
www.onsemi.com/support/sales